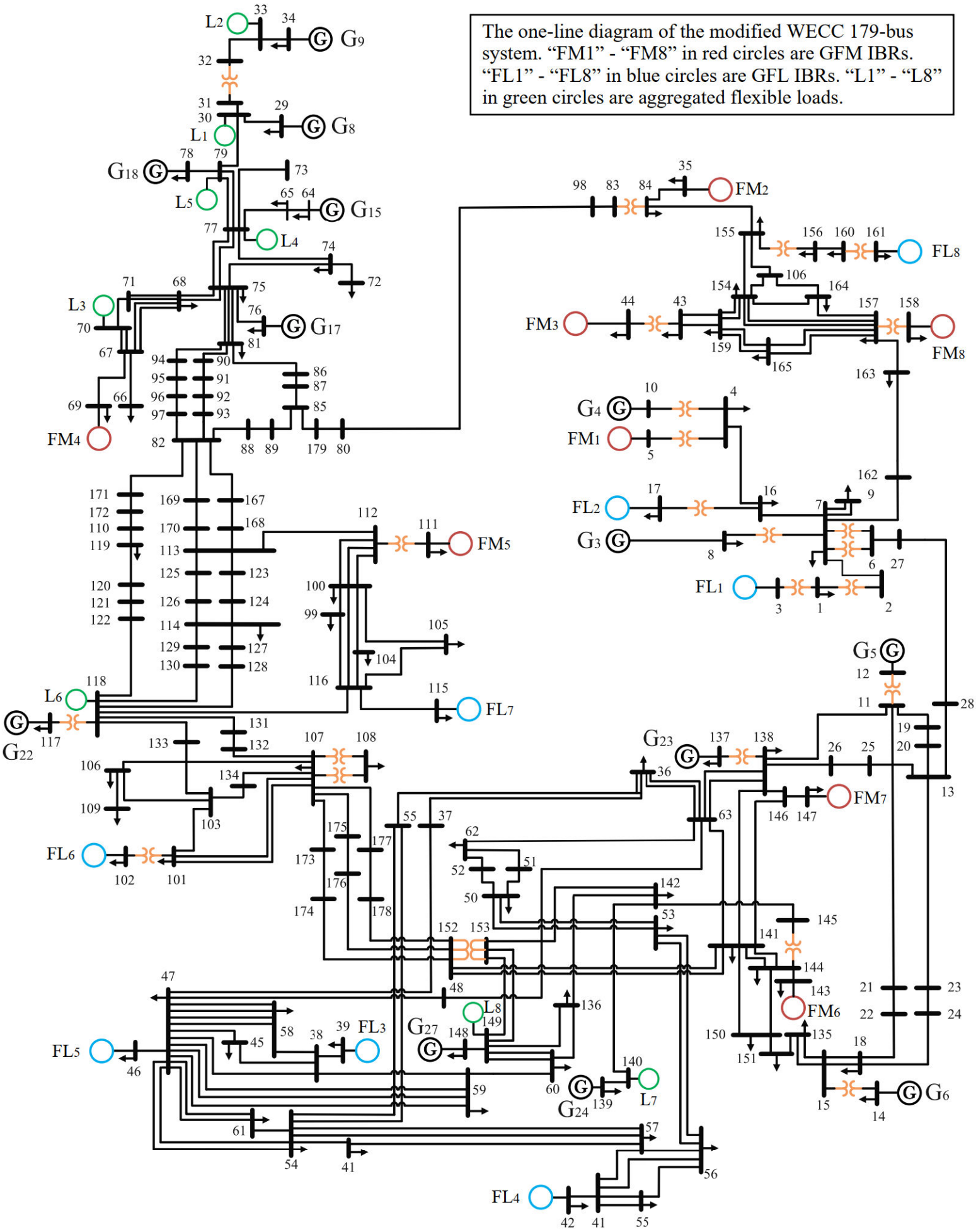The one-line diagram of the modified WECC 179-bus system. “FM1” - “FM8” in red circles are GFM IBRs. “FL1” - “FL8” in blue circles are GFL IBRs. “L1” - “L8” in green circles are aggregated flexible loads.